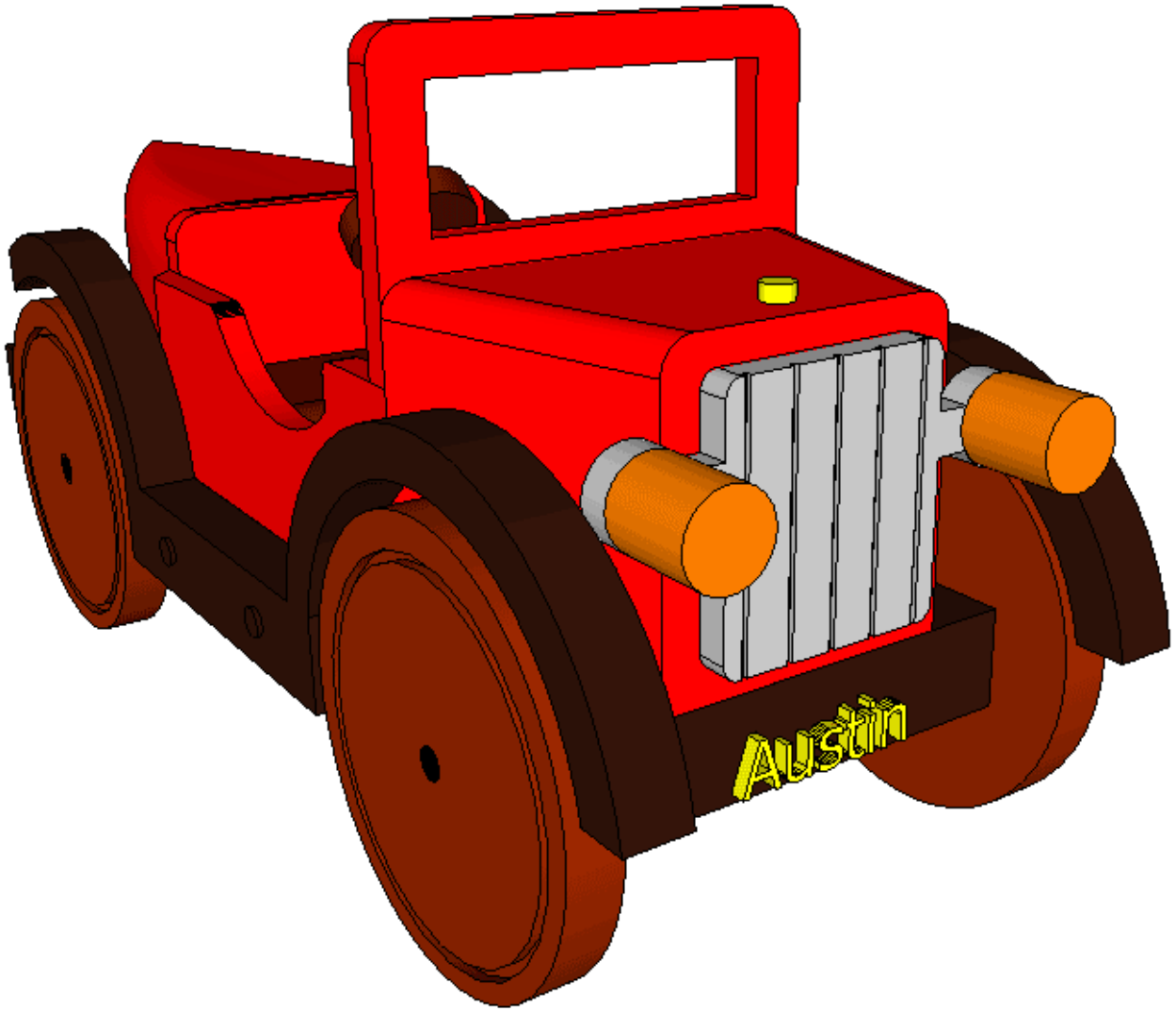

	Austin Seven Ace by Mike John

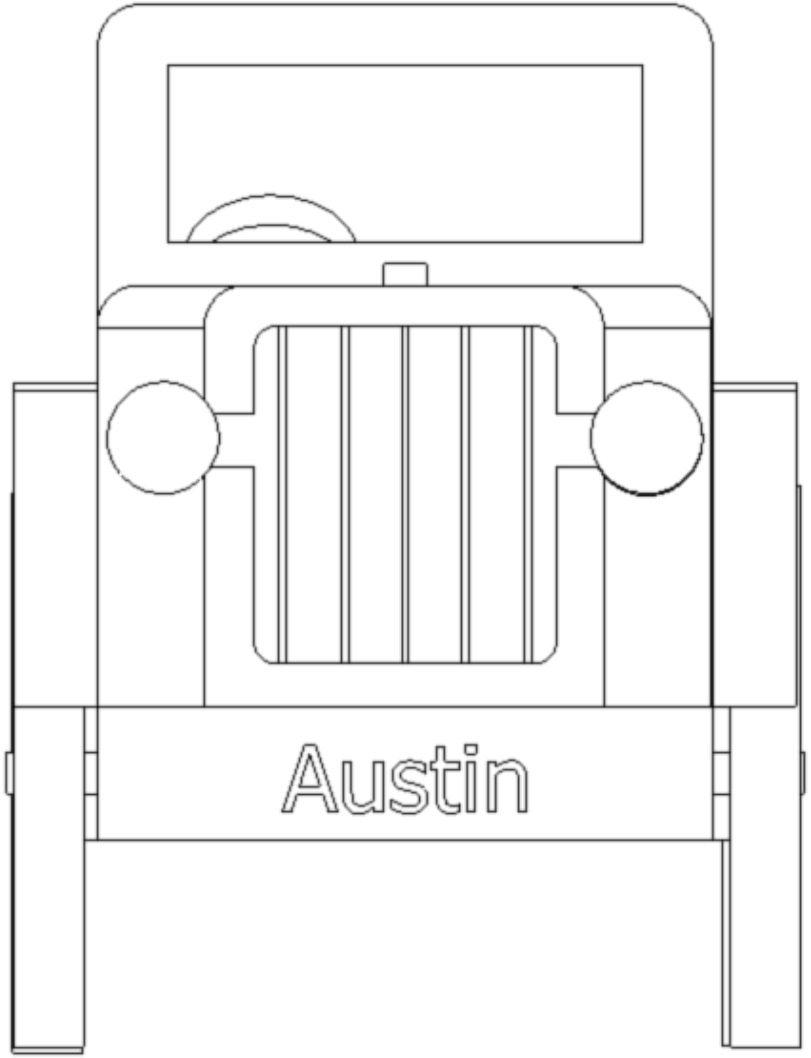

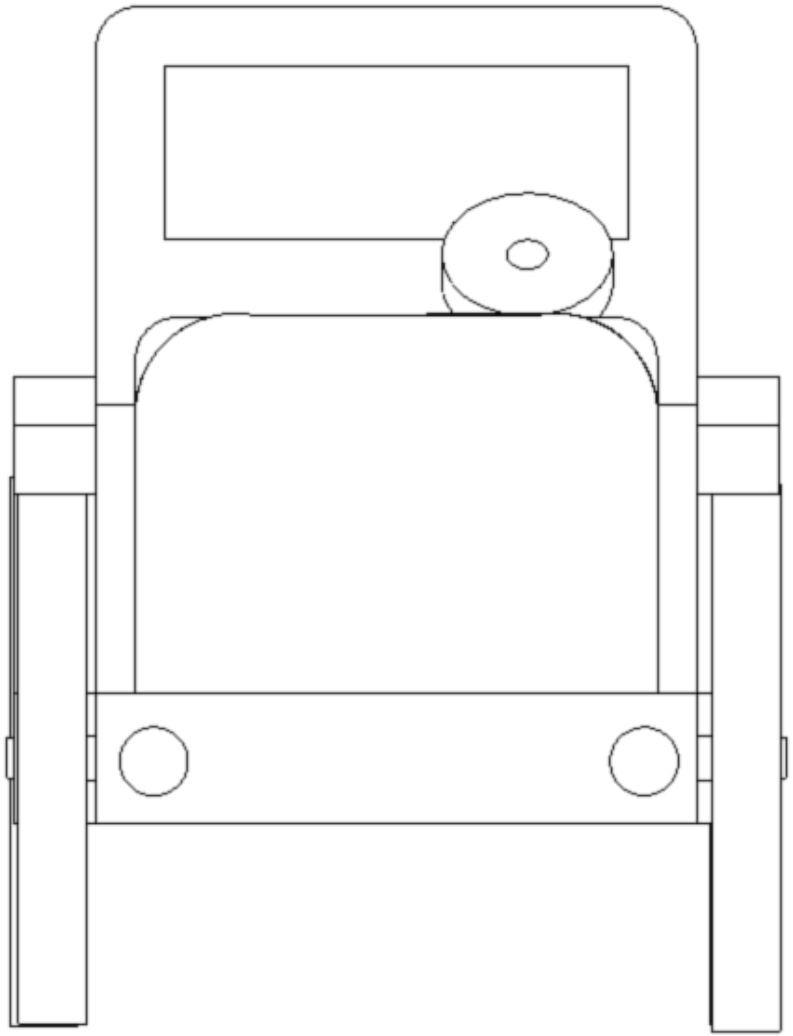

	Austin Seven Ace by Mike John

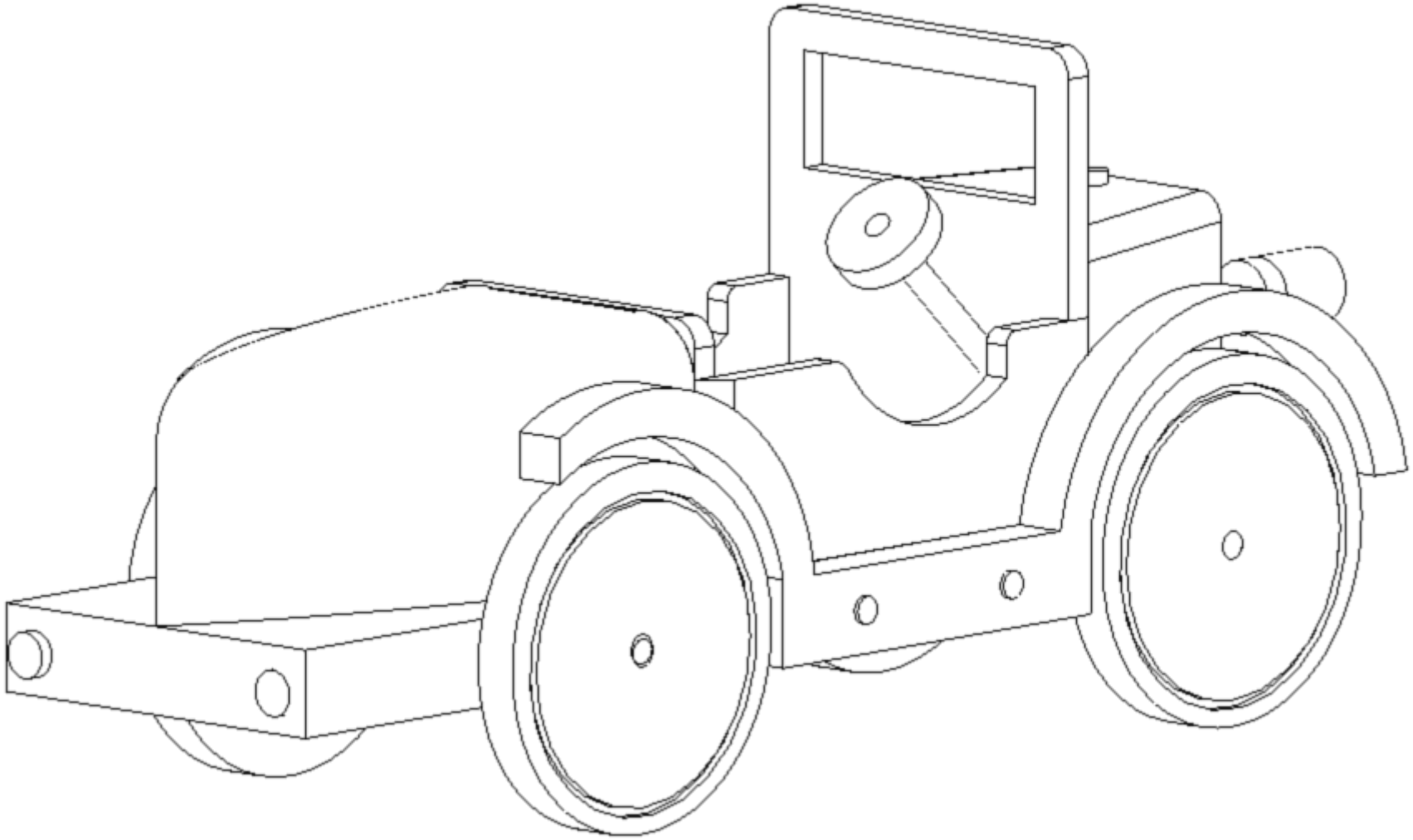

	Austin Seven Ace by Mike John

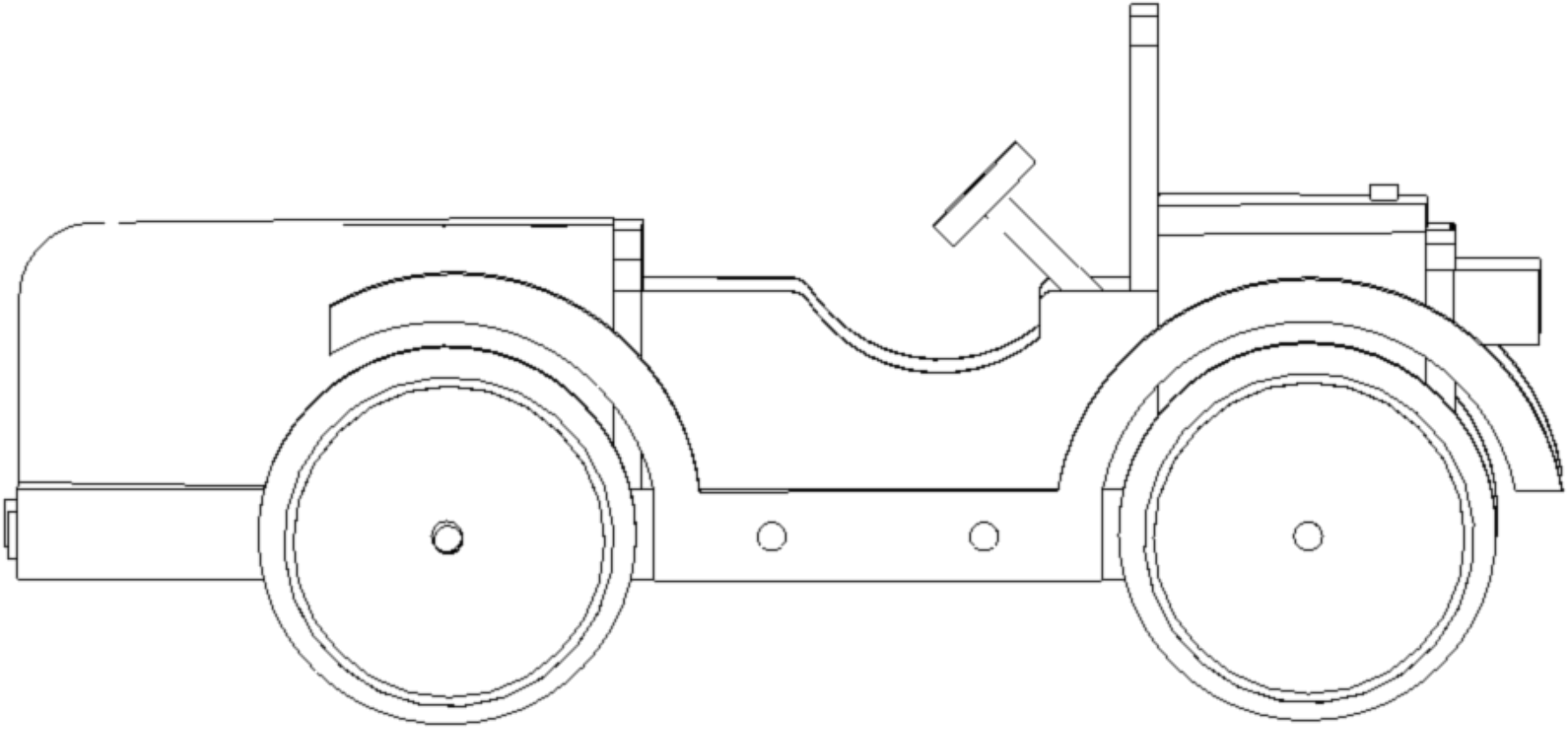

	Austin Seven Ace by Mike John

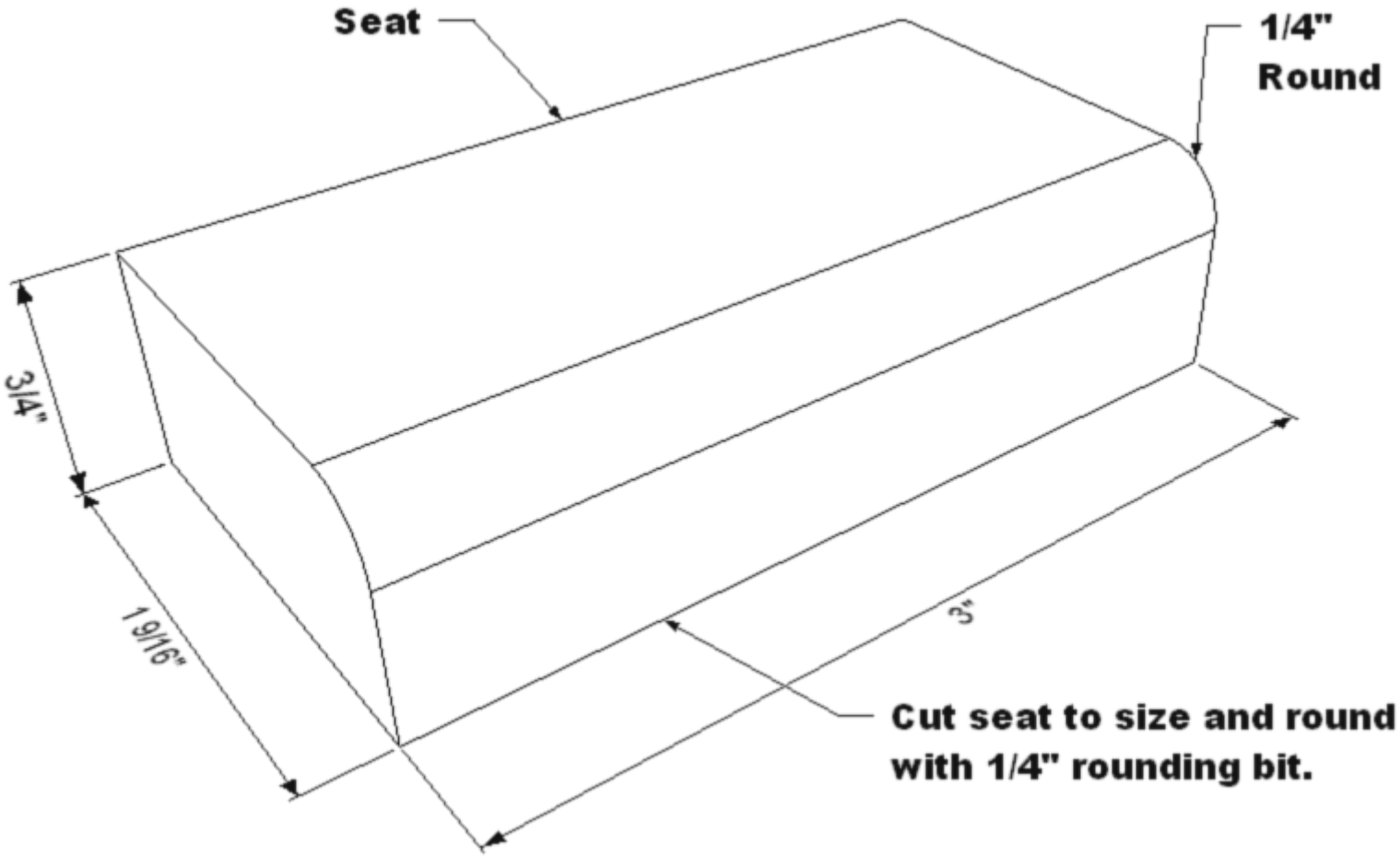

	Austin Seven Ace by Mike John

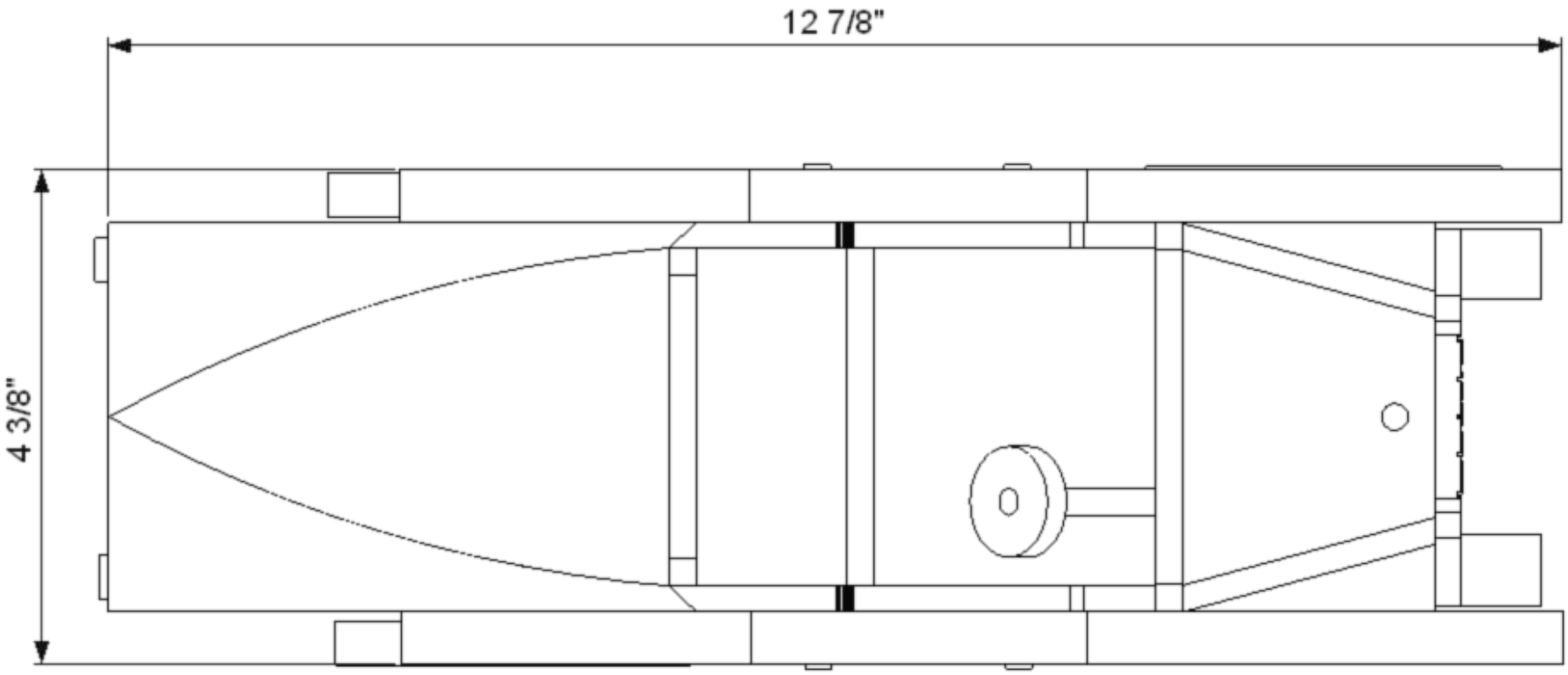

	Austin Seven Ace by Mike John

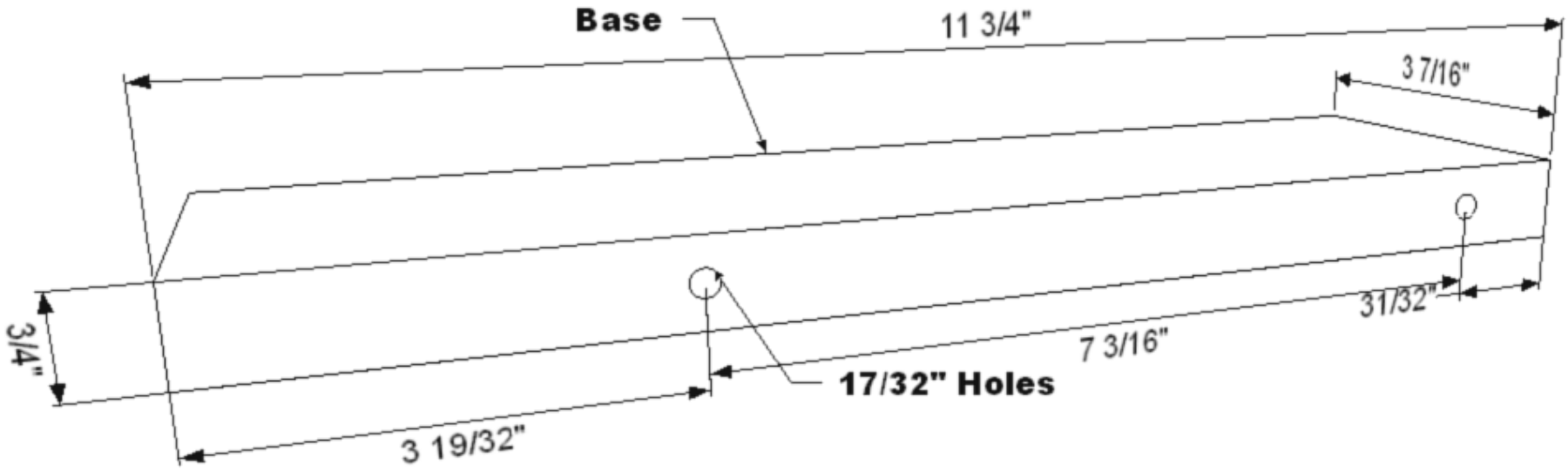
Base
11 3/4"
3 7/16"
3/4"
31/32"
7 3/16"
17/32" Holes
3 19/32"

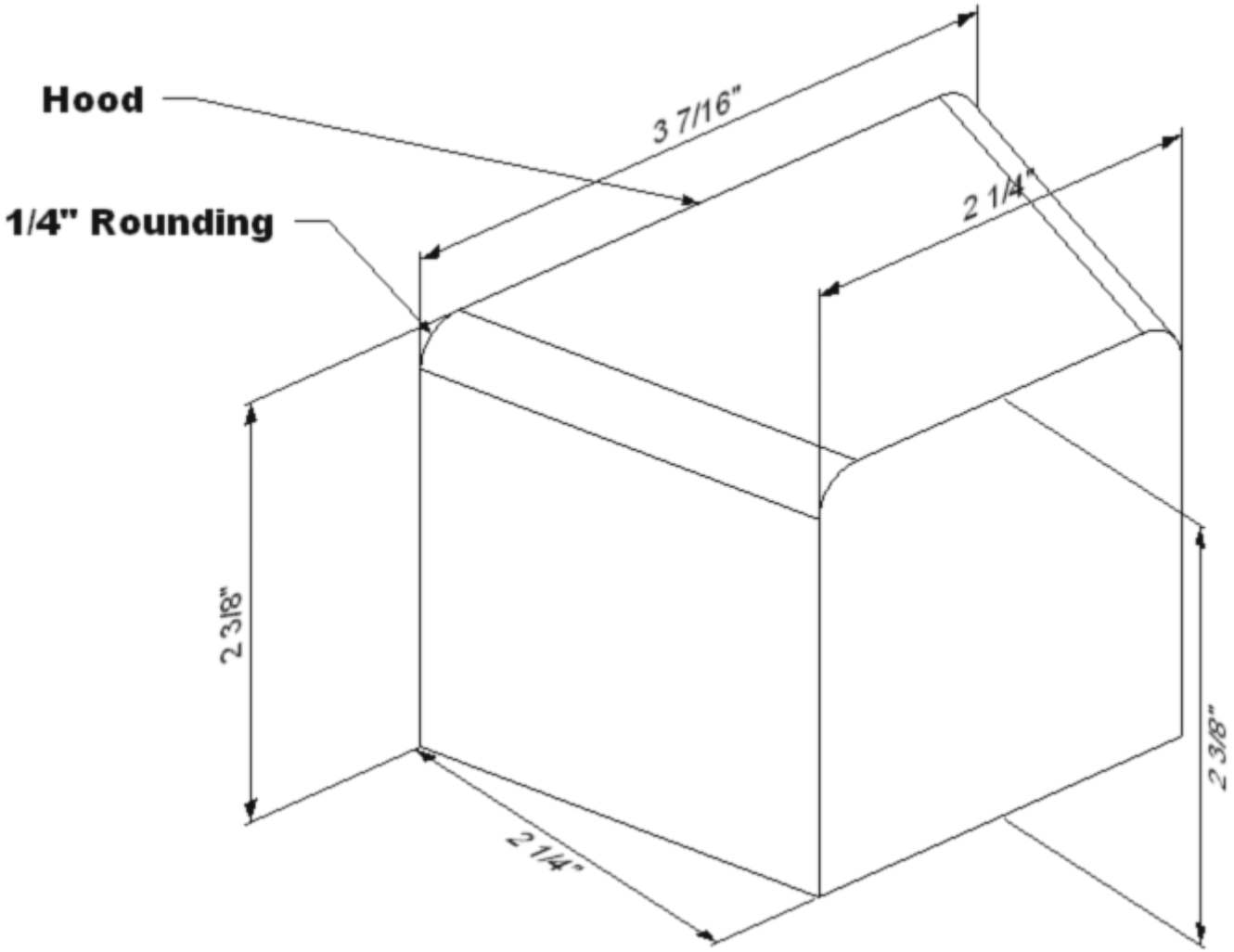

	Austin Seven Ace by Mike John

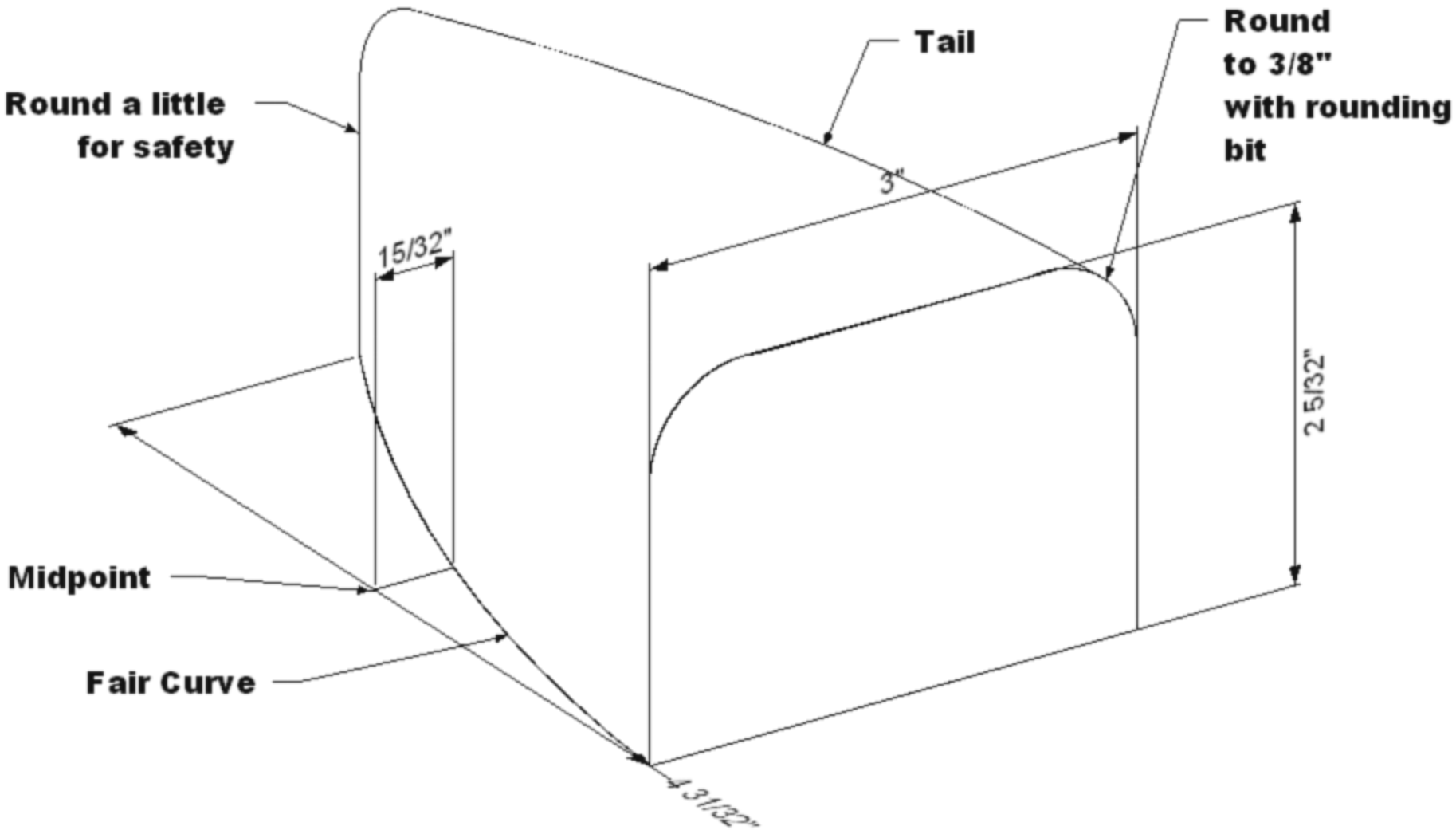

	Austin Seven Ace by Mike John

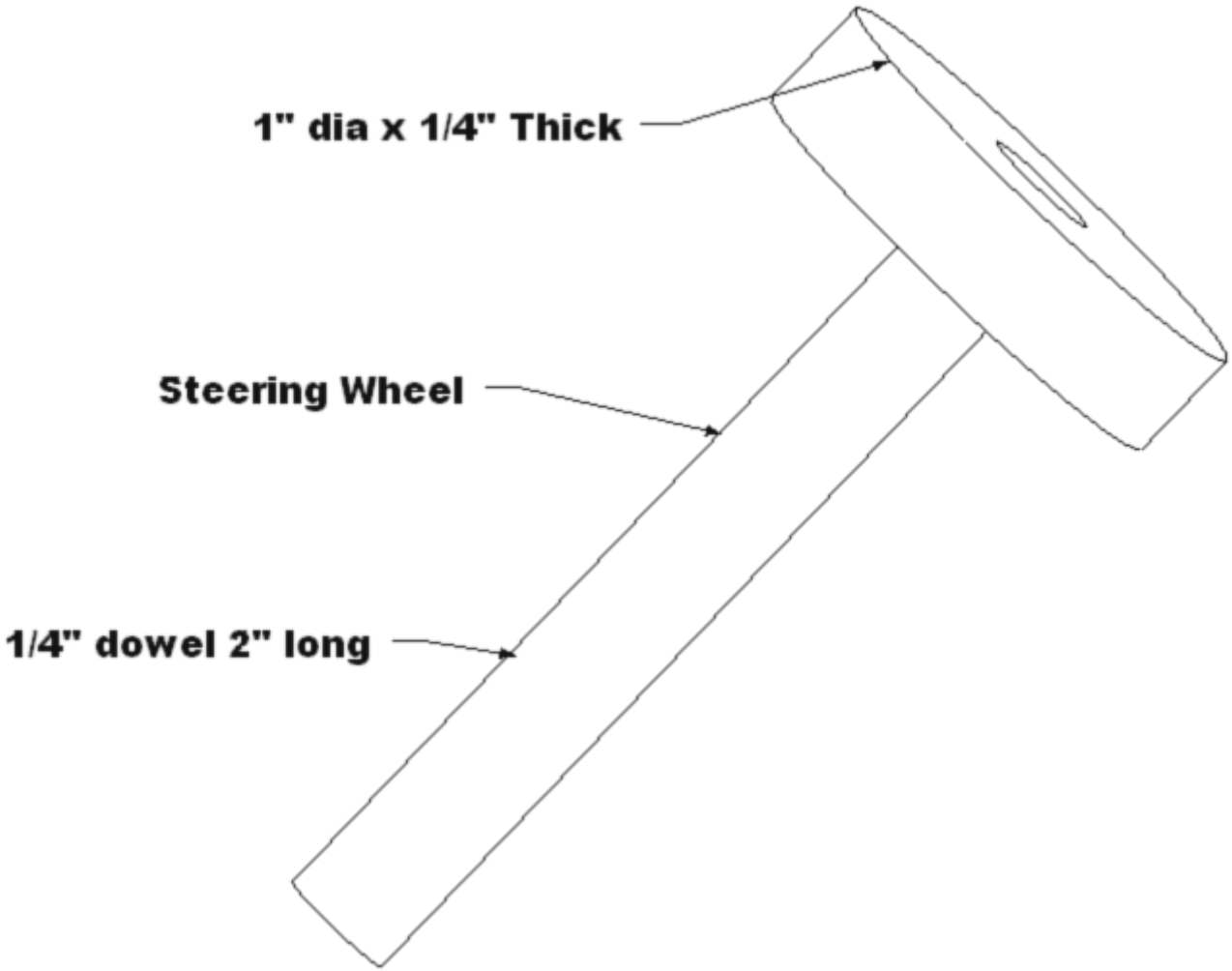

	Austin Seven Ace by Mike John

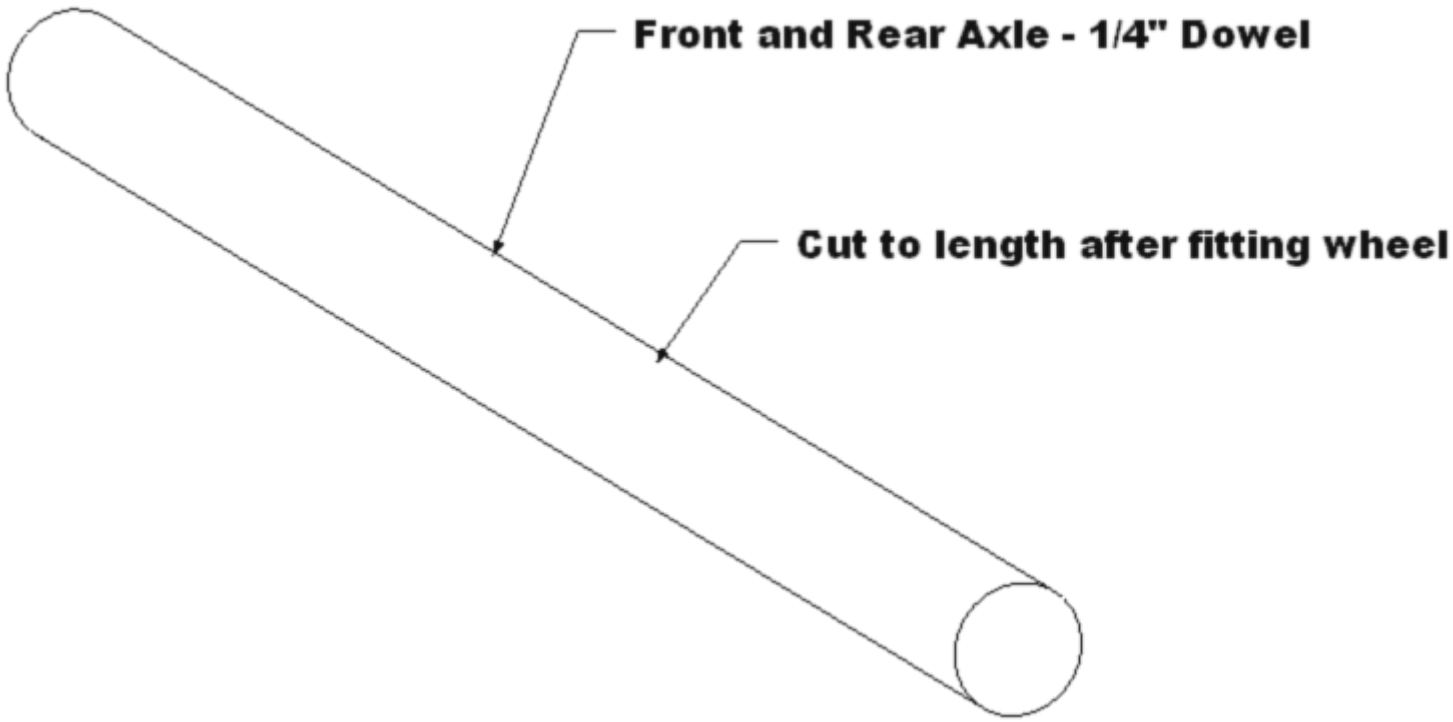
Front and Rear Axle - 1/4" Dowel
Cut to length after fitting wheel

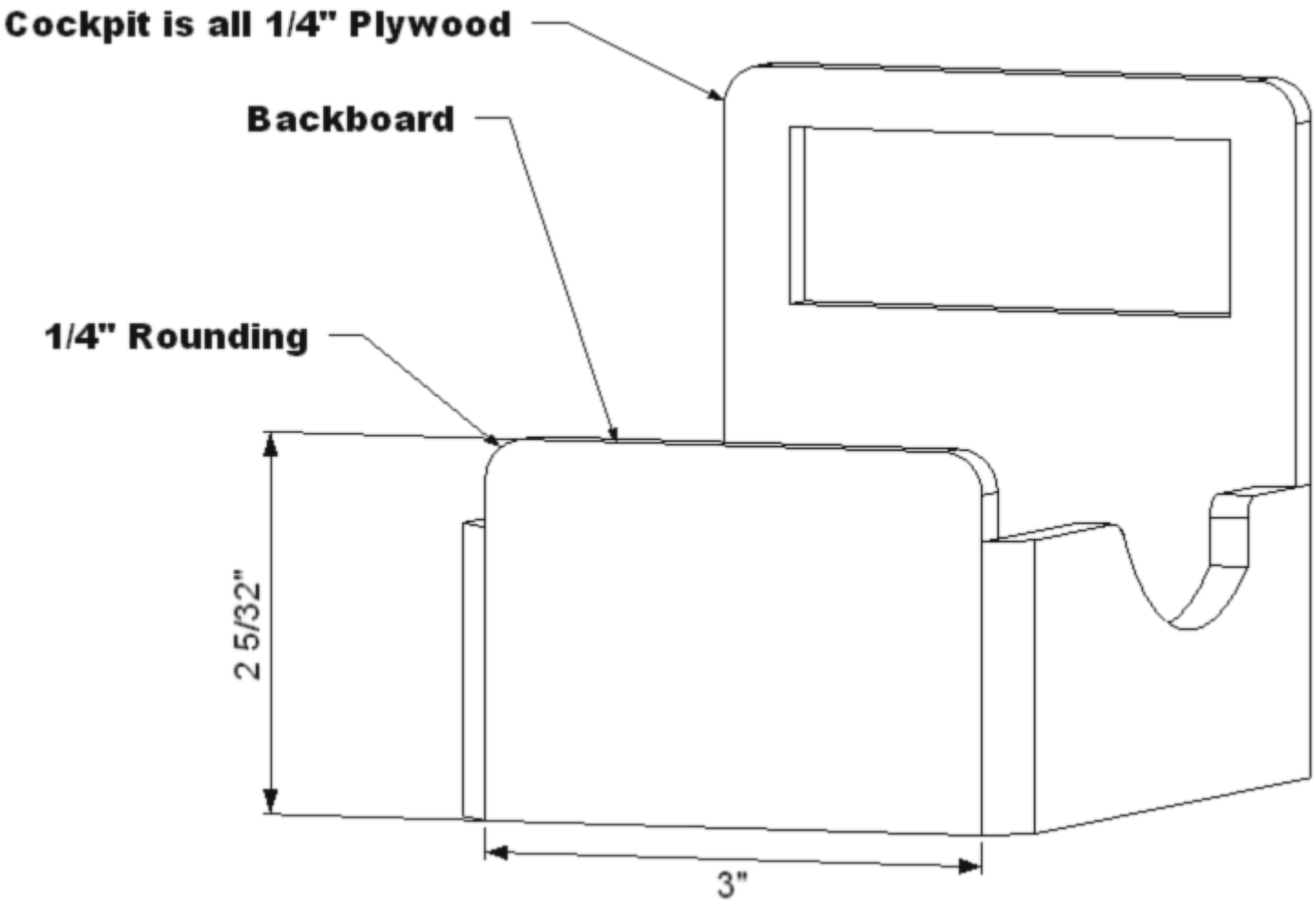

	Austin Seven Ace by Mike John

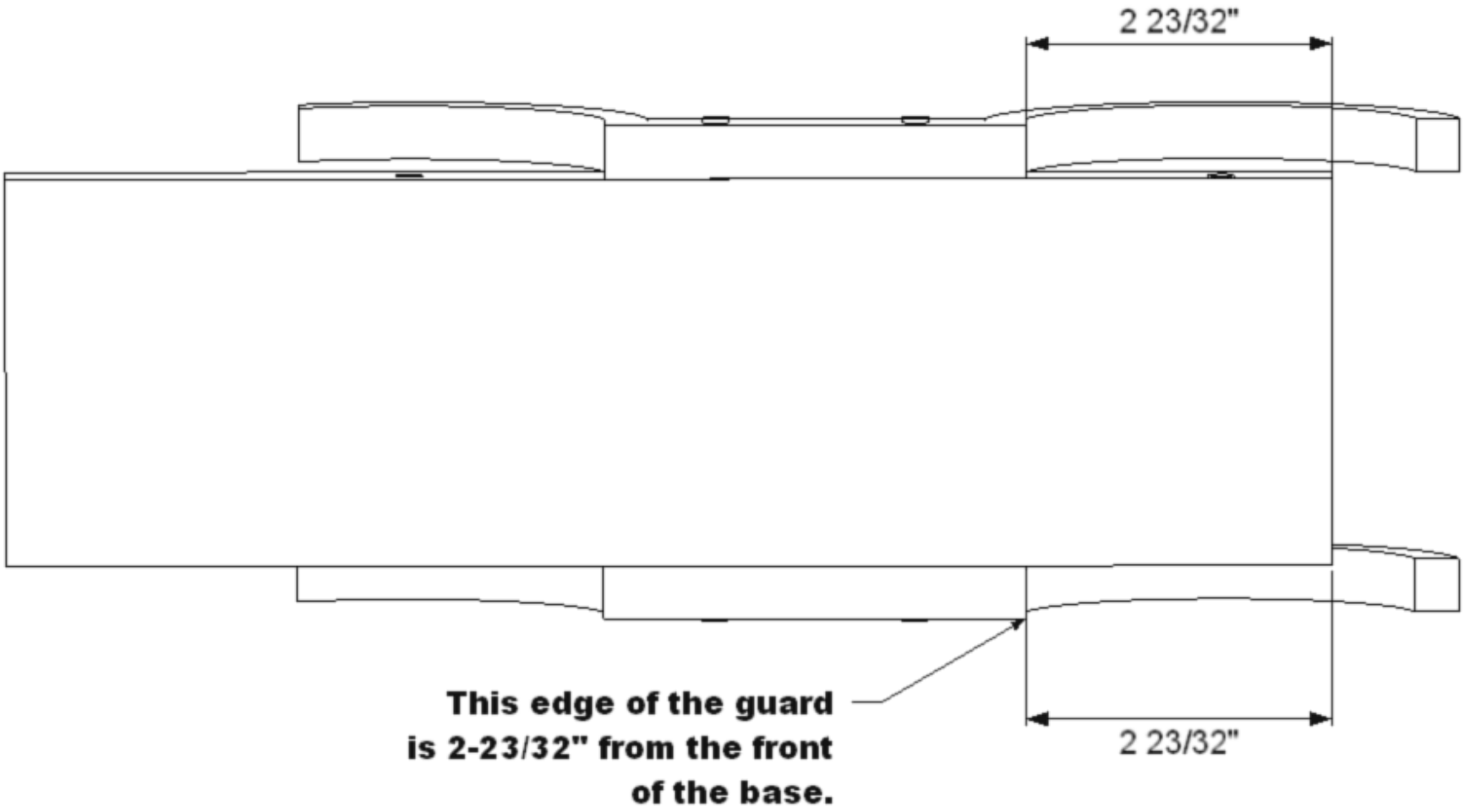
2 23/32"
This edge of the guard
is 2-23/32" from the front
of the base.
2 23/32"

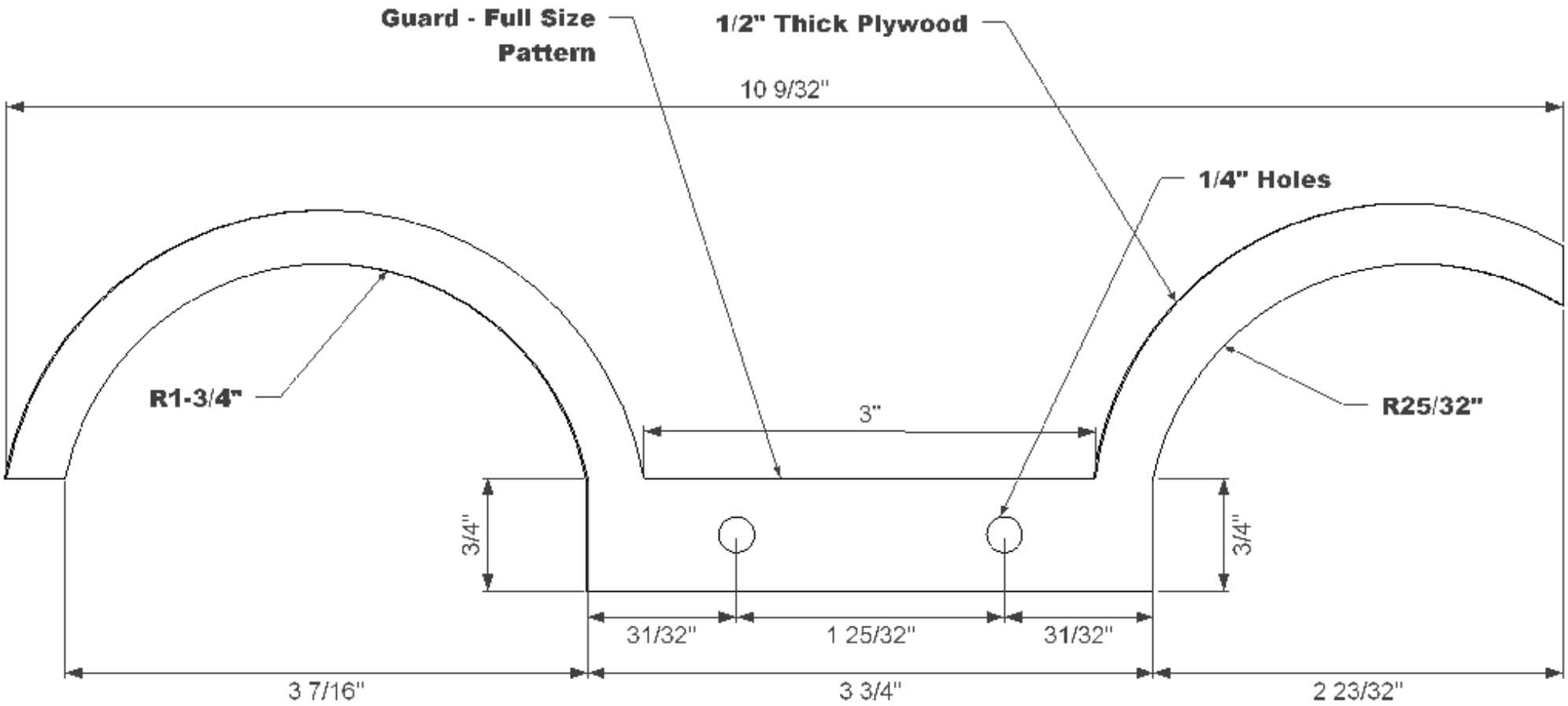

	Austin Seven Ace by Mike John

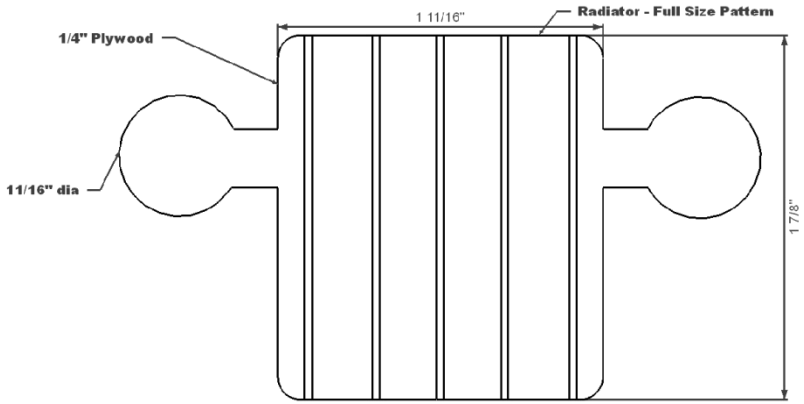
1/4" Plywood
1 11/16"
Radiator - Full Size Pattern
11/16" dia
1 7/8"

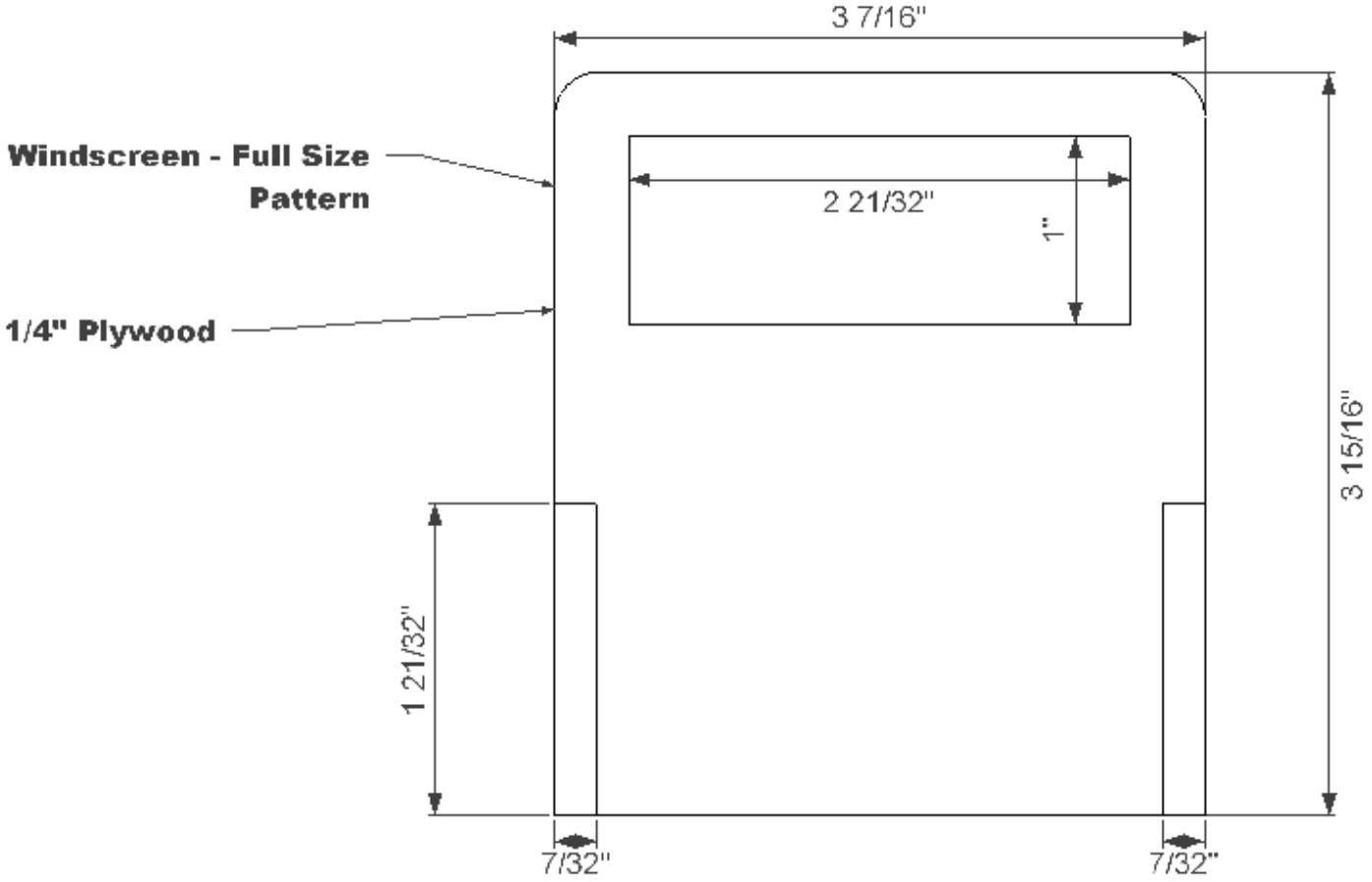

	Austin Seven Ace by Mike John

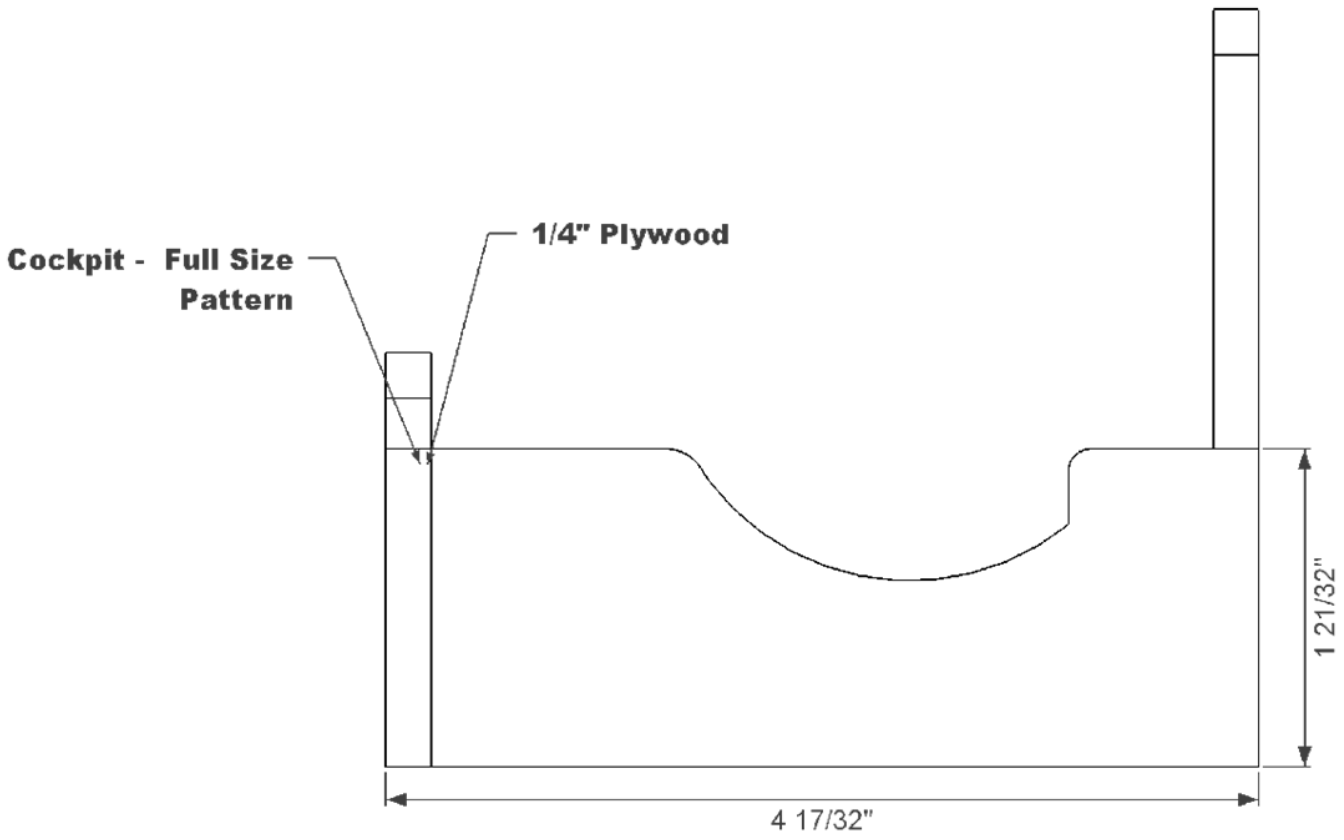

	Austin Seven Ace by Mike John